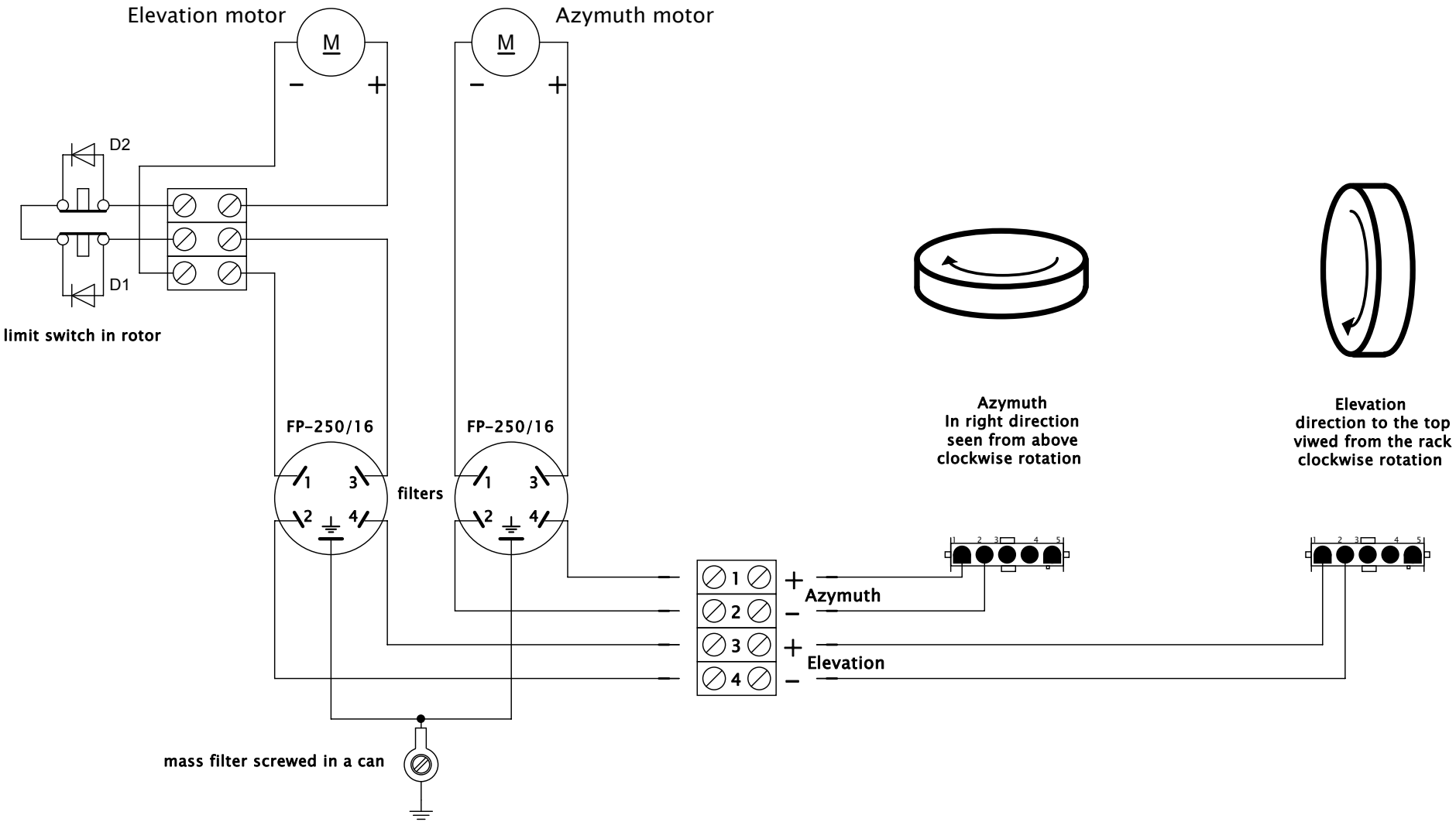
Elevation motor
M
Azymuth motor
M
D2
D1
limit switch in rotor
FP-250/16
FP-250/16
filters
mass filter screwed in a can
Azymuth
Elevation
Azymuth
In right direction
seen from above
clockwise rotation
Elevation
direction to the top
viwed from the rack
clockwise rotation